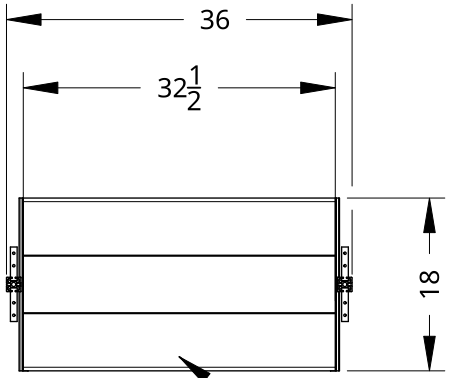

SA-18-36 (Cut to 32.5*inch;)
(4) BL HOLD DOWN CLIPS PER SHELF

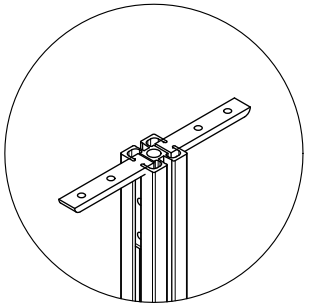

DETAIL A
ANCHOR BRACKETS

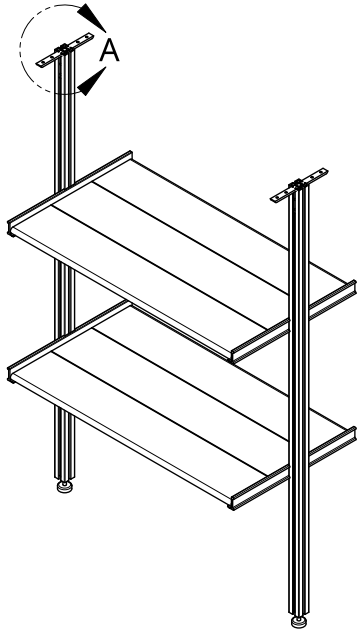

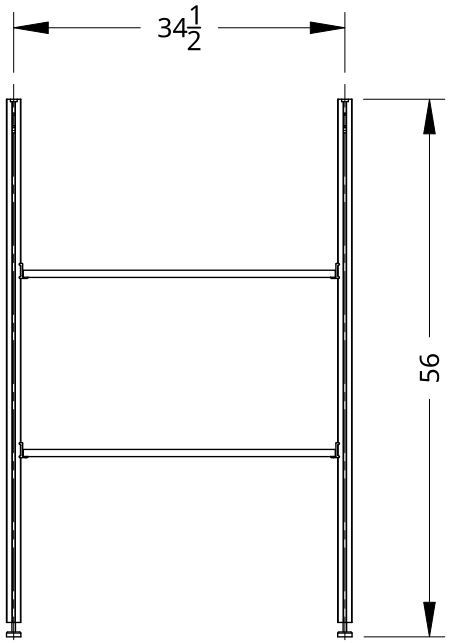

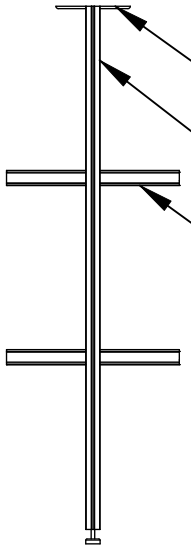

AB-0035

PC2-FC-108 (FTC: 56*inch;)
FEET AT BASE ONLY

BL-18-RP

All shelf positions are
fully adjustable and VIF.

Rakks®
BETTER DESIGN ENDURES

254 Turnpike Road
Westborough, MA 01581
p: 781-455-8700 f: 781-455-8702
rakks.com

DATE: 03/25/2024	BY:CARTER M	SHEET: 1 / 1	VERSION:1	APPROVAL: x

JOB NAME:

SHAKE SHACK FTC

DATE	NOTES	REV.